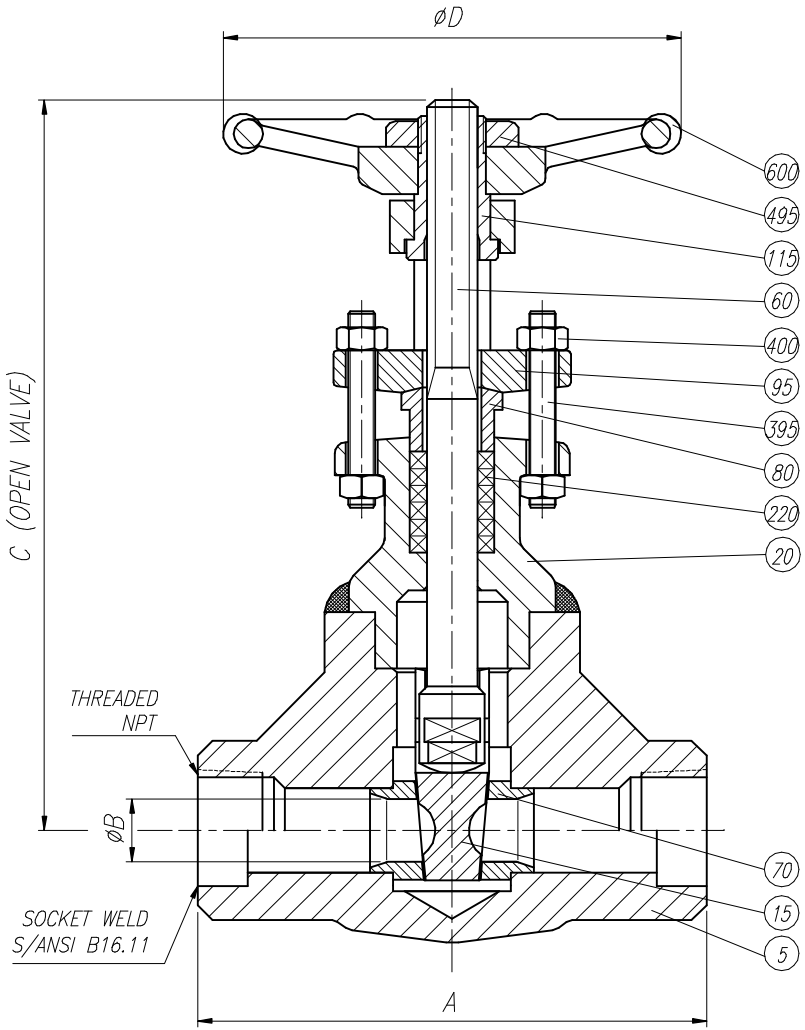

LIST OF MATERIALS	
POS.	DESCRIPTION
5	BODY
15	WEDGE
20	BONNET-YOKE
60	STEM
70	SEAT RING
80	GLAND
95	GLAND FLANGE
115	YOKE SLEEVE
220	PACKING
395	GLAND FLANGE STUD
400	GLAND FLANGE STUD NUT
495	HANDWHEEL NUT
600	HANDWHEEL

FULL BORE	4500#				
	A	øB	C	øD	WEIGHT Kg.
1/2"	120	12	265	140	8
3/4"	130	12	265	140	9
1"	130	12	265	170	9
1 1/4"	210	16	315	170	14.5
1 1/2"	210	16	315	260	15
2"	240	21	390	260	19

REV	Description	Drawn	Date	Approved	Date

RINGO VALVULAS ESPAÑA

Detail: GENERAL ASSEMBLY & LIST OF MATERIALS

Title: GATE VALVE 4500#

Drawn	JLO	Date	30/12/03	Gen Tol ±0.4	Escale	Size	Drwg No.	REV
Approved			30/12/03	Sheet 1 / 1		A3	CR45S1	0