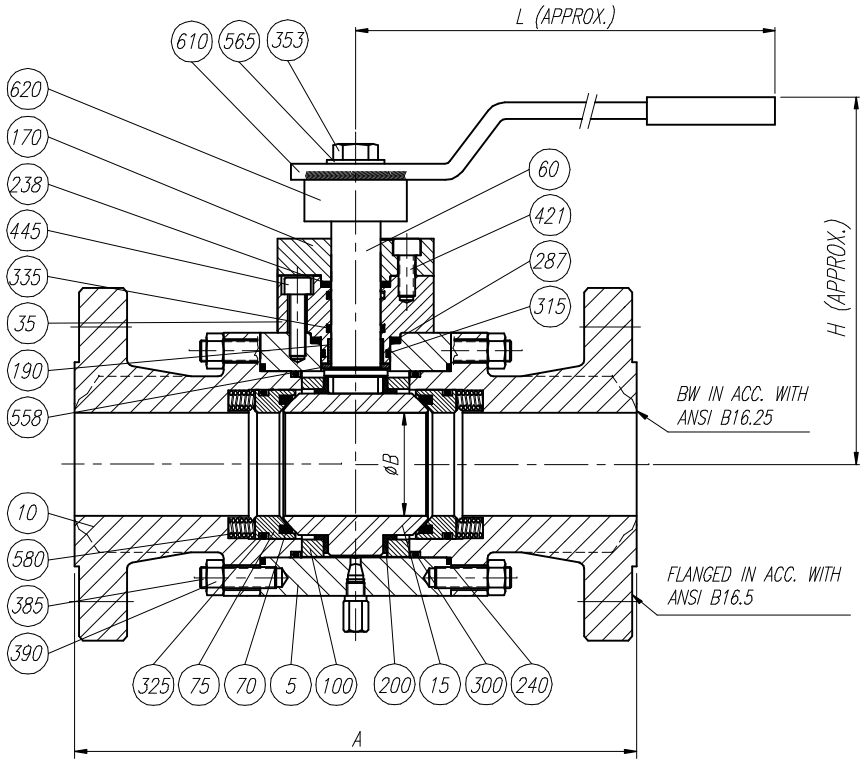

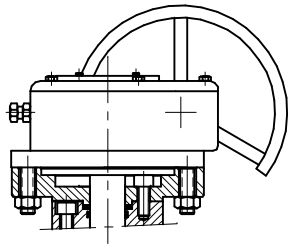

ELECTRICAL AND PNEUMATIC OPERATION UPON REQUEST

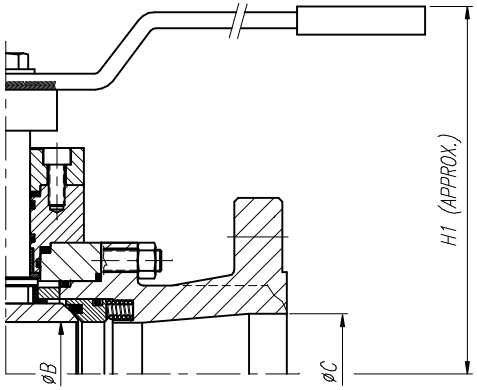

REDUCED BORE

SIZE	A								WEIGHT	
	BW	RF	RTJ	øB	øC	H	H1	L	FULL BORE	REDUCED BORE
2"	216	178	190	51	—	125	—	280	28	—
3"	283	203	216	76	51	150	125	380	36	32
4"	305	229	241	102	76	190	150	480	53	42
6"	457	394	406	152	102	240	190	480	158	95
8"	521	457	470	203	152	425	240	600	203	188
10"	559	533	546	254	203	550	425	600	410	335
12"	635	610	622	305	254	690	550	GEAR	575	487
14"	762	686	698	337	305	775	690	GEAR	815	650
16"	838	762	775	387	337	830	775	GEAR	1057	890
18"	914	864	876	438	387	900	830	GEAR	1300	1140
20"	991	914	927	489	438	990	900	GEAR	1880	1380
24"	1143	1067	1079	590	489	1070	990	GEAR	3250	2150
26"	1245	1143	—	635	590	1170	1170	GEAR	3660	3415
28"	1346	1245	—	686	635	1225	1170	GEAR	4130	3815
30"	1397	1295	—	737	686	1290	1225	GEAR	4565	4285
32"	1524	1372	—	781	737	1350	1290	GEAR	5015	4755

SIZE	A								WEIGHT	
	BW	RF	RTJ	øB	øC	H	H1	L	FULL BORE	REDUCED BORE
34"	1626	1473	—	832	781	1430	1350	GEAR	5590	5225
36"	1727	1524	—	876	832	1490	1430	GEAR	6600	5885
40"	1930	1727	—	978	876	1590	1490	GEAR	7535	6490
42"	2134	1930	—	1022	978	1660	1590	GEAR	8250	7100
								GEAR		
								GEAR		
								GEAR		

LIST OF MATERIALS

POS.	PART NAME	MATERIAL
5	BODY	A105
10	ADAPTOR	A105
15	BALL	A105 + ENP
35	UPPER BODY BONNET	A105
60	SHAFT	A479 T410
70	SEAT	PTFE
75	SEAT CARRIER	A105 + ENP
100	BALL GUIDE	A105
170	SUPPORT FLANGE	A105
190	UPPER BEARING	DU-DRY
200	UPPER BEARING BALL GUIDE	DU-DRY
238	SUPPORT FLANGE GASKET	GRAPHITE
240	BODY ADAPTOR GASKET	GRAPHITE
287	UPPER BONNET GASKET	GRAPHITE
300	ADAPTOR "O" RING	VITON
315	UPPER BONNET "O" RING	VITON
325	SEAT CARRIER "O" RING	VITON
335	STEM "O" RING	VITON
353	HANDLE BOLT	CARBON STEEL
385	BODY ADAPTOR STUD	A193 B7
390	BODY ADAPTOR STUD NUT	A194 2H
421	SUPPORT FLANGE BOLT	A193 B7
445	UPPER BONNET BOLT	CARBON STEEL
558	THRUST BEARING	DU-DRY
565	WASHER	CARBON STEEL
580	SEAT SPRING	INCONEL X750
610	HANDLE PLATE	CARBON STEEL
620	HANDLE	CARBON STEEL

OTHERS MATERIALS AVAILABLE UPON REQUEST

REV	Description	Drawn	Date	Appr	Date

RINGO VALVULAS ESPAÑA

Detail: GENERAL ASSEMBLY & LIST OF MATERIALS

Title: BALL VALVE 150#

Drawn	JLO	Date	20/12/03	Gen Tol ± 0.4	Scale	Size	Drwg No	REV
Appr			20/12/03	Sheet		A3	BR01A1	0