ELECTRICAL AND PNEUMATIC
OPERATION UPON REQUEST

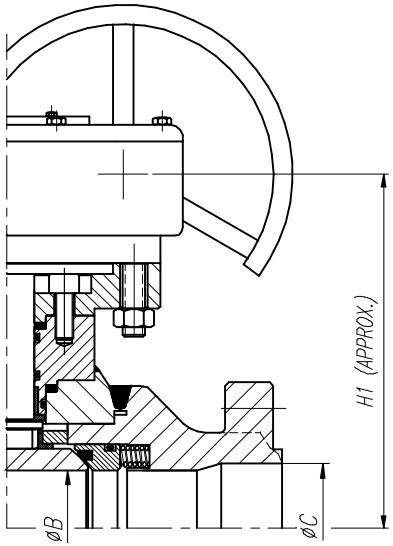

REDUCED BORE

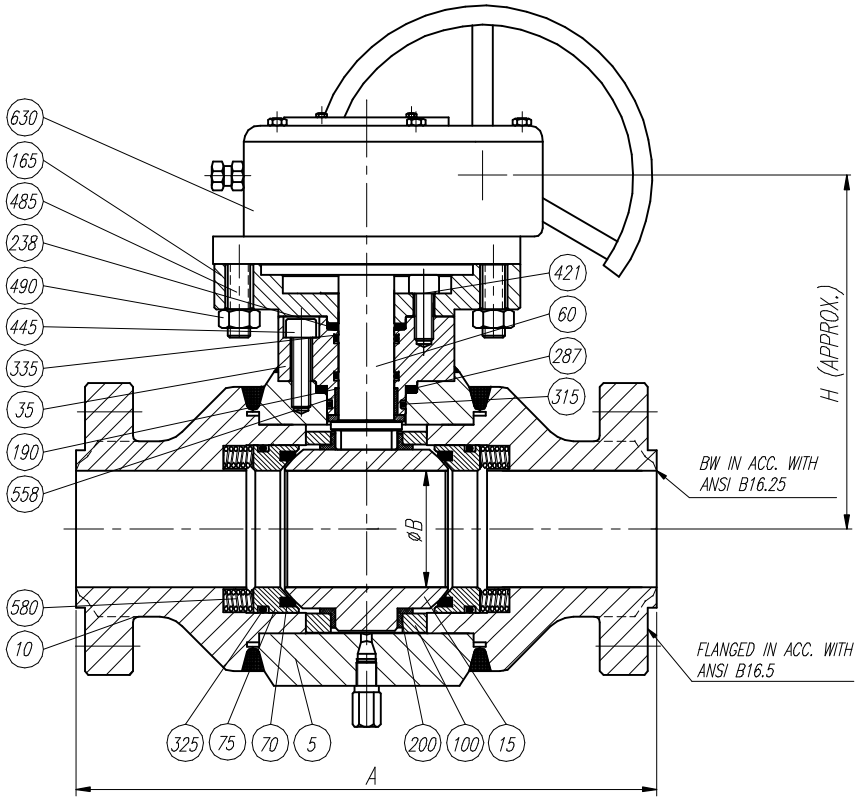

SIZE	A						WEIGHT	
	BW-RF	RTJ	øB	øC	H	H1	FULL BORE	REDUCED BORE
2"	368	371	51	—	180	—	46	—
3"	381	384	76	51	330	180	69	47
4"	457	460	102	76	520	330	129	92
6"	610	613	152	102	590	520	325	185
8"	737	740	203	152	690	590	570	475
10"	838	841	254	203	815	690	965	645
12"	965	968	305	254	850	815	1470	1095
14"	1029	1038	324	305	985	850	1930	1425
16"	1130	1140	375	324	1170	985	2465	2115
18"	1219	1232	425	375	1210	1170	3220	2900
20"	1321	1334	473	425	1295	1210	4280	3865
24"	1549	1568	571	473	1340	1295	6050	5335
26"	1676	—	619	571	1395	1340	6810	6165
28"	1803	—	673	619	1460	1395	8650	6950
30"	1905	—	714	673	1520	1460	10535	8740
32"	2032	—	762	714	1590	1520	12605	10720
34"	2159	—	810	762	1665	1590	14355	12485

LIST OF MATERIALS

POS.	PART NAME	MATERIAL
5	BODY	A105
10	ADAPTOR	A105
15	BALL	A105 + ENP
35	UPPER BODY BONNET	A105
60	SHAFT	A479 T410
70	SEAT	PTFE
75	SEAT CARRIER	A105 + ENP
100	BALL GUIDE	A105
165	SUPPORT FLANGE	A105
190	UPPER BEARING	DU-DRY
200	UPPER BEARING BALL GUIDE	DU-DRY
238	SUPPORT FLANGE GASKET	GRAPHITE
287	UPPER BONNET GASKET	GRAPHITE
315	UPPER BONNET "O" RING	VITON
325	SEAT CARRIER "O" RING	VITON
335	STEM "O" RING	VITON
421	SUPPORT FLANGE BOLT	A193 B7
445	UPPER BONNET BOLT	CARBON STEEL
485	ACTUATOR STUD	CARBON STEEL
490	SUPPORT FLANGE BOLT	A193 2H
558	THRUST BEARING	DU-DRY
580	SEAT SPRING	INCONEL X750
630	ACTUATOR	COMMERCIAL

OTHERS MATERIALS AVAILABLE UPON REQUEST

REV	Description	Drawn	Date	Appr	Date

RINGO VALVULAS ESPAÑA

Detail: GENERAL ASSEMBLY & LIST OF MATERIALS

Title: BALL VALVE 900#

Drawn	JLO	Date	11/12/03	Gen Tol ± 0.4	Scale	Size	Drwg No	REV
Appr			11/12/03	Sheet		A3	BR09S1G	0