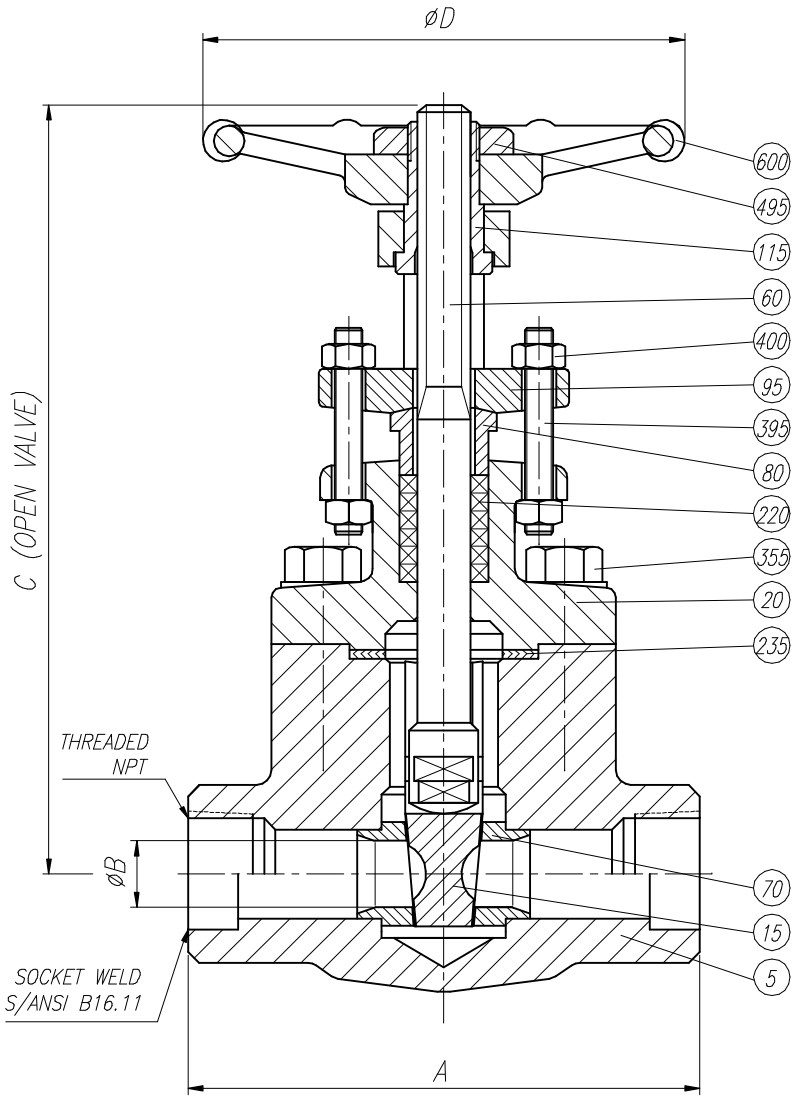

LIST OF MATERIALS

POS.	DESCRIPTION
5	BODY
15	WEDGE
20	BONNET-YOKE
60	STEM
70	SEAT RING
80	GLAND
95	GLAND FLANGE
115	YOKE SLEEVE
220	PACKING
235	BODY BONNET GASKET
355	BODY BONNET BOLT
395	GLAND FLANGE STUD
400	GLAND FLANGE STUD NUT
495	HANDWHEEL NUT
600	HANDWHEEL

FULL BORE	REDUCED BORE	1500#				
		A	øB	C	øD	WEIGHT Kg.
1/4"		90	8	152	80	2,5
3/8"	1/2"	90	10	152	80	2,5
1/2"	3/4"	110	14	180	100	3,8
3/4"	1"	120	18	218	120	5,4
1"	1 1/4"	130	24	252	140	8
1 1/4"	1 1/2"	130	29	275	170	10,2
1 1/2"	2"	210	36,5	320	170	15
2"		210	40	325	170	15

REV	Description	Drawn	Date	Approved	Date

RINGO VALVULAS ESPAÑA

Detail: GENERAL ASSEMBLY & LIST OF MATERIALS

Title: GATE VALVE 1500#

Drawn	JLO	Date	01/10/03	Gen Tol ±0.4	Escale	Size	Drwg No.	REV
Approved			01/10/03	Sheet 1 / 1		A3	CR15A1	0