ELECTRICAL AND PNEUMATIC OPERATION UPON REQUEST

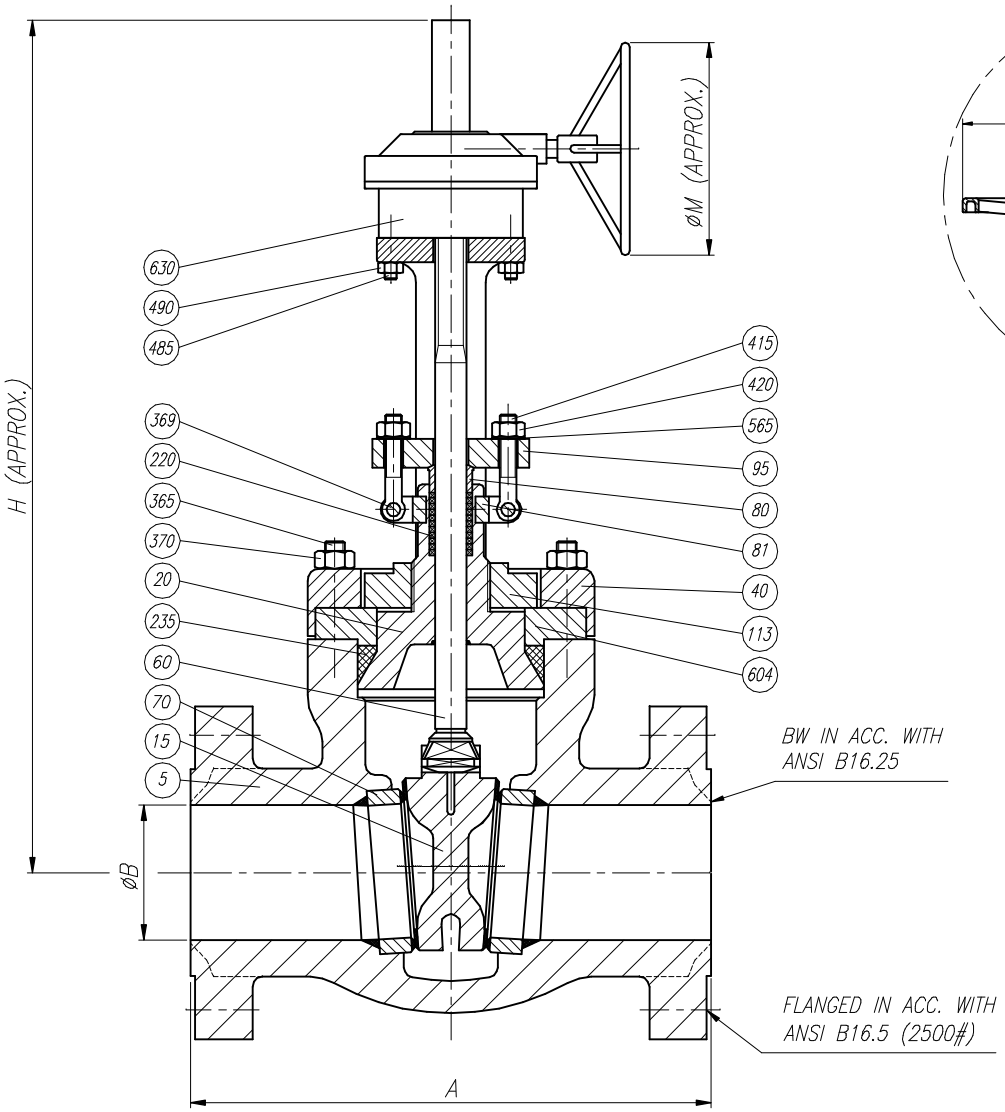

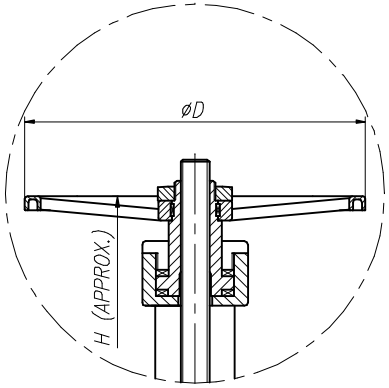

LIST OF MATERIALS

POS.	DESCRIPTION
5	BODY
15	WEDGE
20	BONNET
40	YOKE
60	STEM
70	SEAT RING
80	GLAND
81	EYEBOLT CARRIER
95	GLAND FLANGE
113	BONNET SUJECTION NUT
150	WEDGE GUIDE
220	PACKING
235	BODY BONNET GASKET
365	BODY YOKE STUD
369	EYEBOLT CARRIER BOLT
370	BODY YOKE STUD NUT
415	EYEBOLT
420	EYEBOLT NUT
485	ACTUATOR STUD
490	ACTUATOR STUD NUT
565	EYEBOLT WASHER
604	SUJECTION GASKET PLATE
630	ACTUATOR

SIZE	A(BW)	øB	Hmax	øD	øM	WEIGHT
3"	368	57.1	700	450	——	135
4"	457	72.9	790	600	——	215
6"	609	111	980	600	——	550
8"	762	146	1500	——	750	900
10"	914	184.1	1600	——	750	1600
12"	1041	219	1760	——	750	2300
14"	1117	241.3	1880	——	900	3200
16"	1244	276	1980	——	900	4100
18"	1397	311.1	2110	——	900	5200
20"	1397	342.9	2310	——	900	6800
24"	1625	412.8	2700	——	900	9500

REV	Description	Drawn	Date	Appr	Date

RINGO VALVULAS ESPAÑA

Detail: GENERAL ASSEMBLY & LIST OF MATERIALS

Title: GATE VALVE P. SEAL 2500#

Drawn	JLO	Date	26/03/04	Gen Tol ± 0.4	Scale	Size A3	Drwg No CR25PS2
Appr			26/03/04	Sheet 1 / 1			REV 0