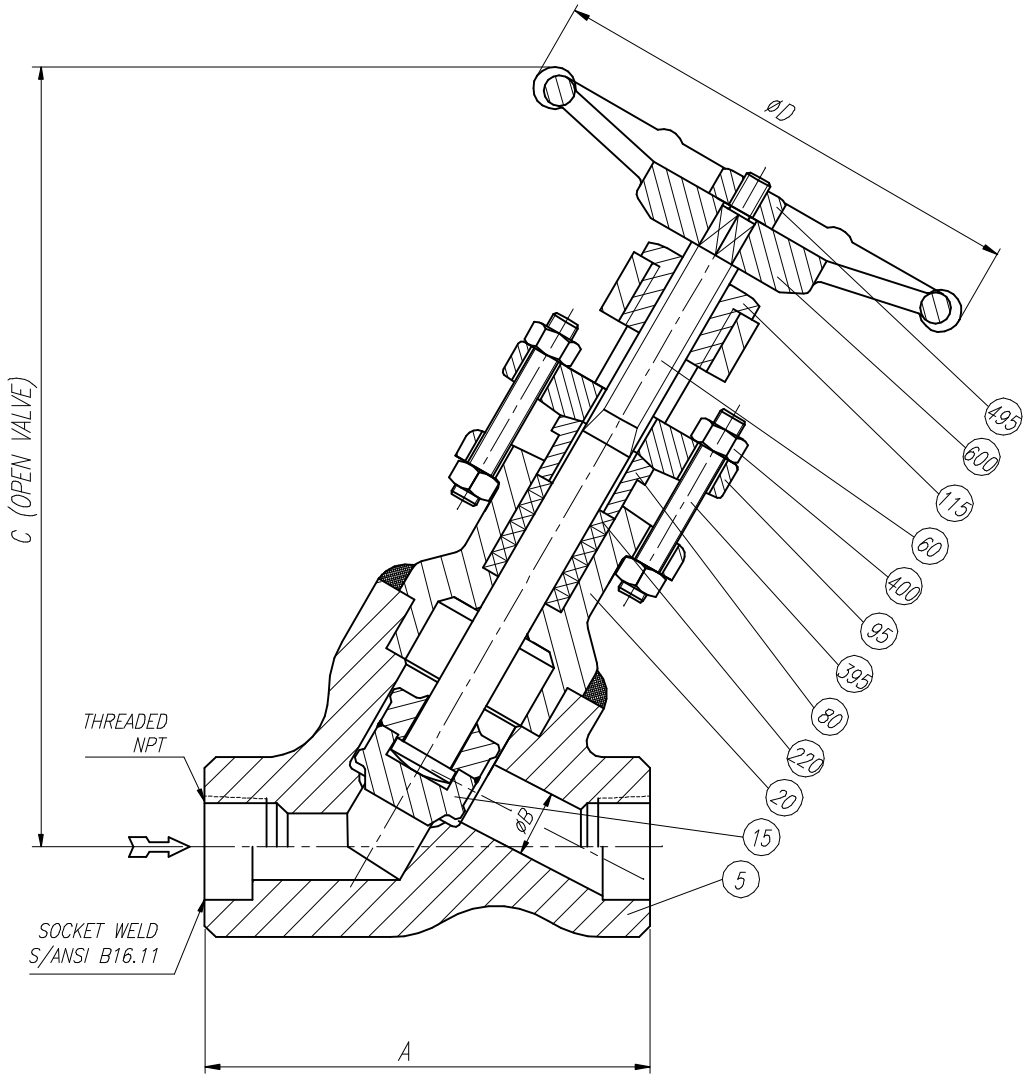

LIST OF MATERIALS	
POS.	DESCRIPTION
5	BODY
15	DISC
20	BONNET-YOKE
60	STEM
80	GLAND
95	GLAND FLANGE
115	YOKE SLEEVE
220	PACKING
395	GLAND FLANGE STUD
400	GLAND FLANGE STUD NUT
495	HANDWHEEL NUT
600	HANDWHEEL

FULL BORE	1500#				
	A	ØB	C	ØD	WEIGHT Kg.
1/4"	100	7	185	100	3
3/8"	100	9	185	100	3
1/2"	100	13	185	100	3
3/4"	110	17,5	230	140	4
1"	125	22,5	240	140	5
1 1/4"	150	28	305	170	9,5
1 1/2"	160	35	340	200	11
2"	190	46	400	260	17
2 1/2"	368	56	680	400	60
3"	368	62	680	500	60

REV	Description	Drawn	Date	Approved	Date

RINGO VALVULAS ESPAÑA

Detail: GENERAL ASSEMBLY & LIST OF MATERIALS

Title: GLOBE "Y" VALVE 1500#

Drawn	JLO	Date	01/10/03	Gen Tol ±0.4	Escale	Size	Drwg No.	REV
Approved			01/10/03	Sheet 1 / 1		A3	GYR15S1	0