LIST OF MATERIALS	
POS.	DESCRIPTION
5	BODY
15	DISC
60	SHAFT
164	ADJUSTING RING
555	SPRING WASHER
565	DISC WASHER
595	SPRING
660	PLUG
701	STOP PIN

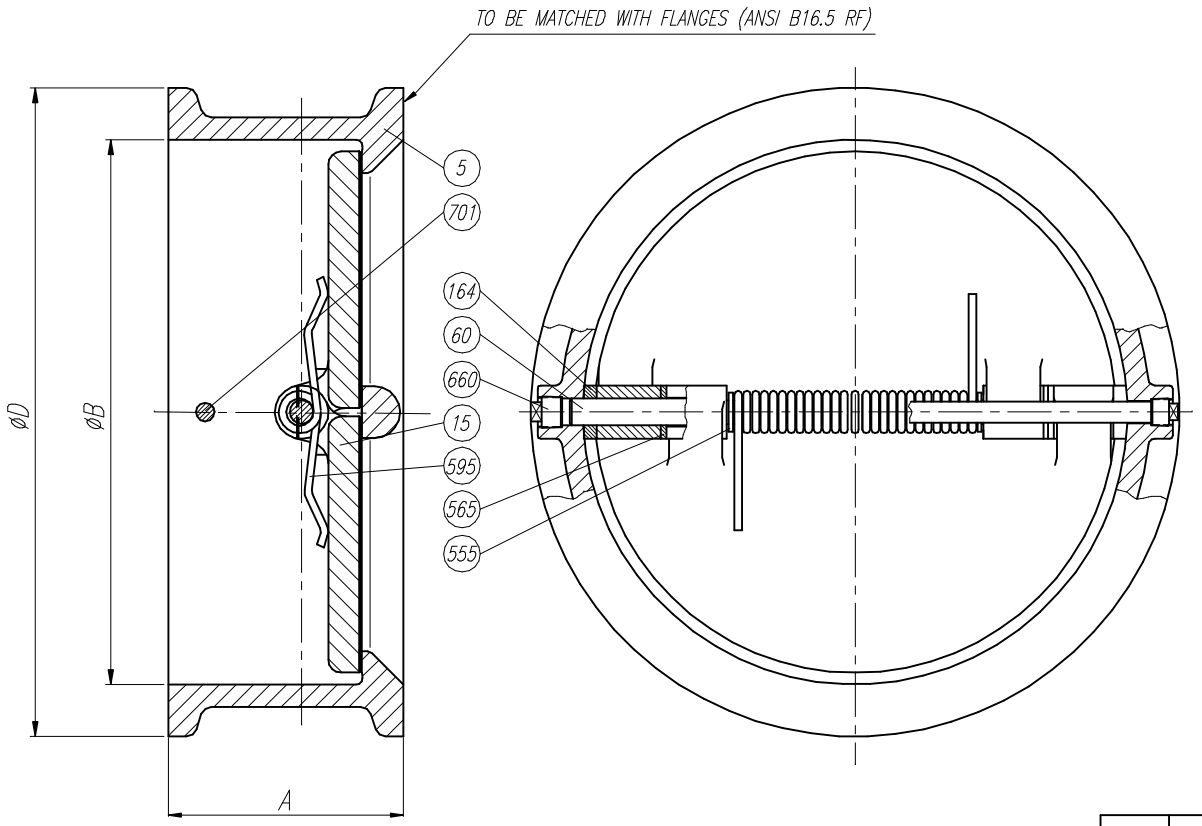

SIZE	A	ØB	ØD	WEIGHT
2"	60	58	110	3
2 1/2"	67	73	129	4
3"	73	88	148	6
4"	73	108	180	8
5"	86	132	215	15
6"	98	160	250	18
8"	127	210	307	31
10"	146	266	361	51
12"	181	310	422	77
14"	222	355	485	117
16"	232	405	539	190
18"	264	455	596	200
20"	292	505	653	265
24"	318	608	775	410
28"	368	700	823	525
30"	368	750	883	660
36"	483	910	1045	1020
42"	568	1055	1198	1540
48"	629	1205	1366	2260

REV	Description	Drawn	Date	Appr	Date

RINGO VALVULAS ESPAÑA

Detail: GENERAL ASSEMBLY & LIST OF MATERIALS

Title: DUO CHECK VALVE 300#

Drawn	JLO	Date	12/12/03	Gen Tol ± 0.4	Scale	Size	Drwg No	REV
Appr			12/12/03	Sheet 1 / 1		A3	RR03DC	0