| LIST OF MATERIALS | |
|---|---|
| POS. | DESCRIPTION |
| 5 | BODY |
| 15 | PLUG |
| 20 | BONNET |
| 70 | SEAT RING |
| 235 | BODY BONNET GASKET |
| 355 | BODY BONNET BOLT |
| 595 | SPRING |

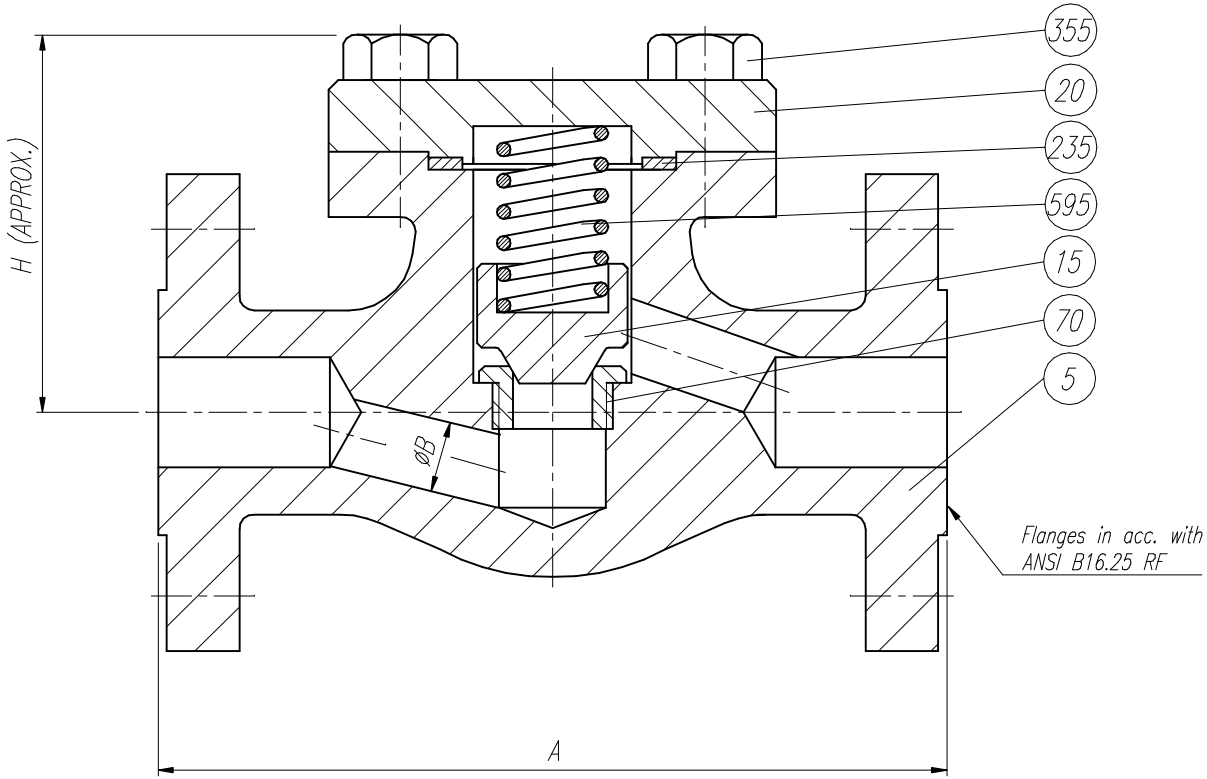


| REDUCED BORE | 600# | | | |
|---|---|---|---|---|
| | A | ØB | C | WEIGHT Kg |
| 1/2" | 165 | 9 | 50 | 2.9 |
| 3/4" | 191 | 12,5 | 55 | 4.8 |
| 1" | 216 | 17,5 | 70 | 9.7 |
| 1 1/4" | | | | |
| 1 1/2" | 241 | 29 | 98 | 12 |
| 2" | 292 | 35 | 110 | 17.3 |

| REV | Description | Drawn | Date | Approved | Date |
|---|---|---|---|---|---|
| | | | | | |
| | | | | | |
| | | | | | |

RV RINGO VALVULAS ESPAÑA

Detail: GENERAL ASSEMBLY & LIST OF MATERIALS

Title: PISTON CHECK 600#

| Drawn | JLO | Date | 01/12/03 | Gen Tol ±0.4 | Escale | Size | Drwg No. | REV |
|---|---|---|---|---|---|---|---|---|
| Approved | | | 01/12/03 | Sheet 1 / 1 | | A3 | RR06A1R | 0 |